ENGINE, OIL PUMP & PAN - Z26S4D92AN/AH/BN/BH (C7502783)

RZR - RZR PRO S4 ULTIMATE (R01) - Z26S4D92AN/AH/BN/BH

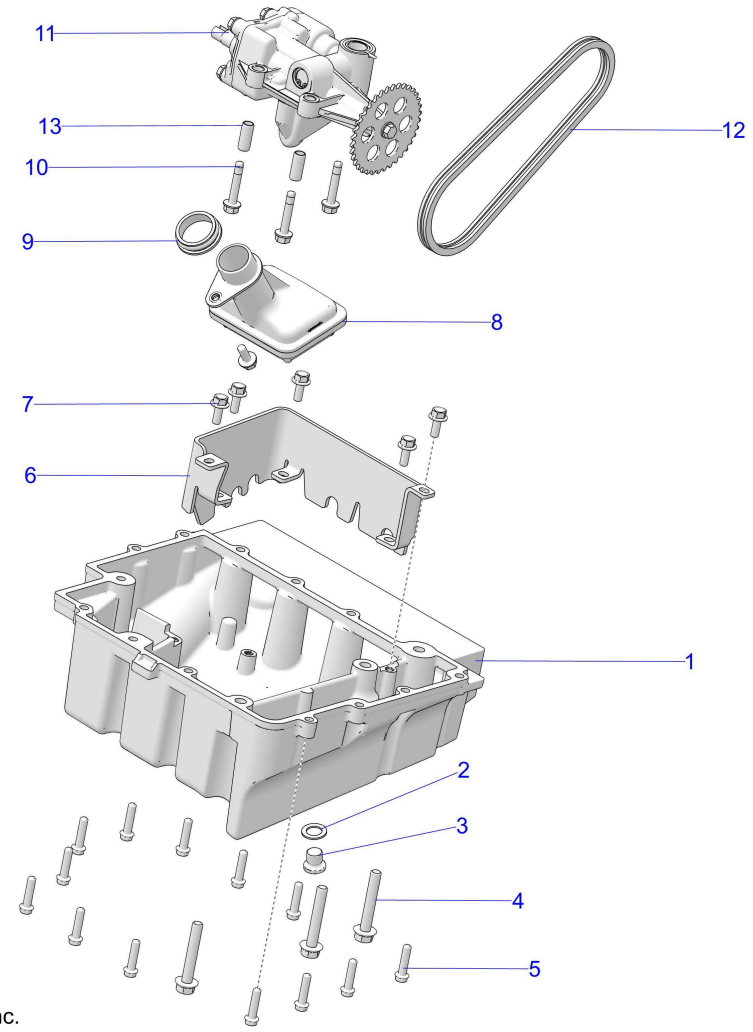

© 2023 Polaris Industries Inc.

C750278

Reference #	*Part#*	*Description*	*Quantity*
1	5140221	PAN-OIL	1
2	7556937	WASHER-COPPER SEALING	1
3	7052306	PLUG-SOCKET,M12X1.5 DIN 908A	
4	7517793	SCR-M8X1.25X50 HX/FL-Y	3
5	7519297	SCREW-HXFLG,M6X1.0X25,10.9	13
6	5261851	BAFFLE-OIL,STAMPED	1
7	7519236	SCR-HXFL-M6X1.0X16 8.8 ZYL NYL	6
8	2521628	PICKUP, OIL PUMP, WET SUMP	1
9	5415949	SEAL-PICKUP	1
10	7516827	SCR-M6X1.0X35,HX/FL-Y/D	3
11	3023141	PUMP-OIL [INCL. O-RING]	1
11	3610269	O-RING,OIL PUMP	1
12	3225043	CHAIN-OIL PUMP DRIVE,G-90	1
13	7661975	DOWEL-HOLLOW,OIL PUMP	2

Copyright 1996-2026 Polaris Industries U.S.A All rights reserved.